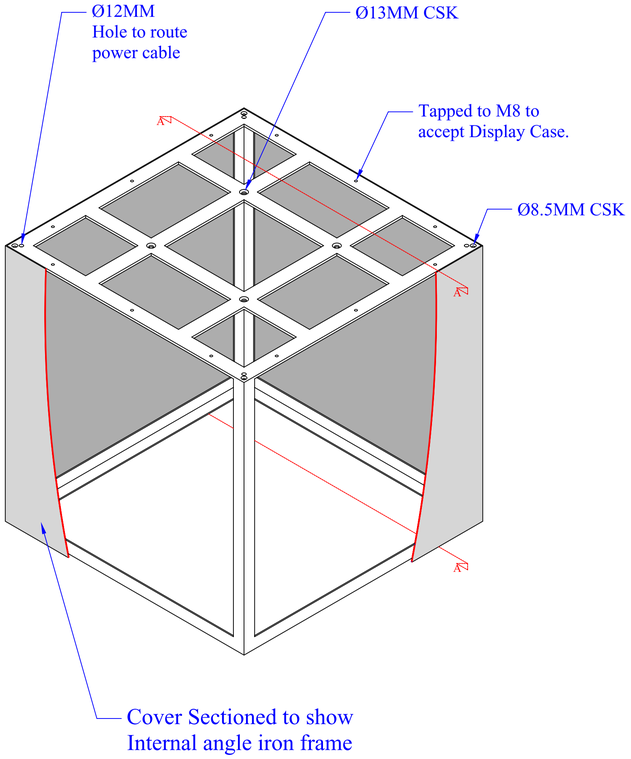

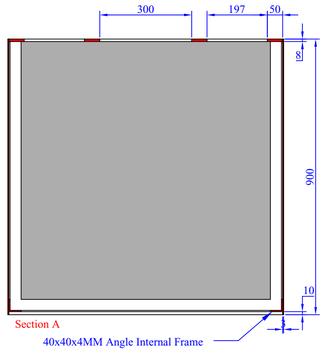

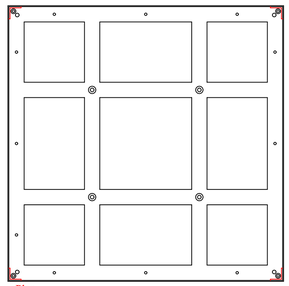

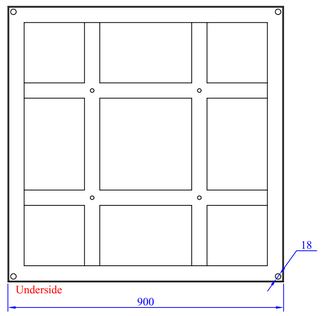

Cover Detail

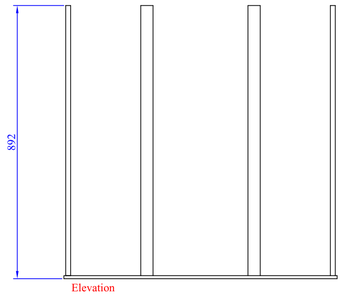

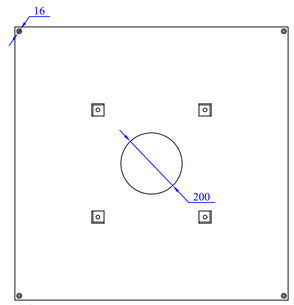

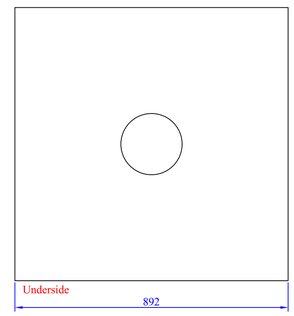

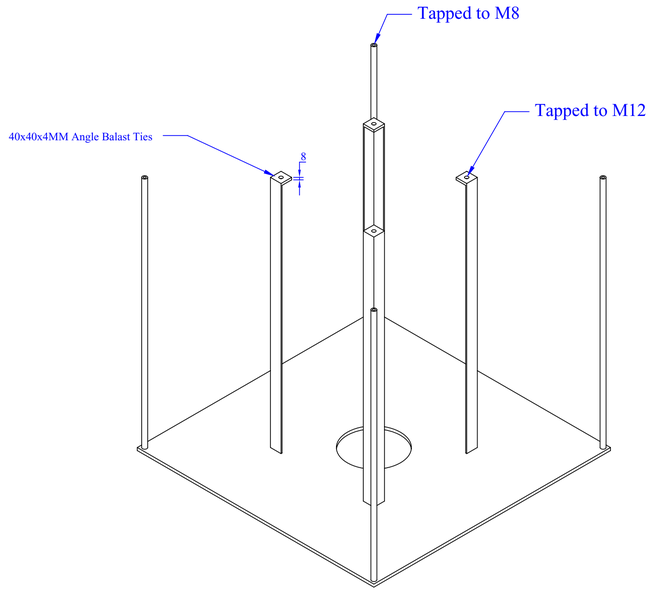

Base Detail

Base and Cover Details.

Project: Display Case.

Scale: $\frac{1}{10}$ @A1.

Date: 11th.Nov.'10.

BUSHY PARK IRONWORKS.
Unit 22 to 24 Greenhills Business Park, Greenhills Road, Tallaght,
Dublin 24, Ireland. Tel: 00353(0)1 4622788 Fax:00353(0)1 4622790
Website: www.bushyparkironworks.com Email: info@bushyparkironworks.com

Drawn by: T R MURPHY.

Drawing No. 11111004

NOTE:
1. ALL DIMENSIONS TO BE CHECKED ON SITE AND NO MEASUREMENTS ARE TO BE SCALED OFF THIS DRAWING.
2. INCASE OF DISCREPANCY BUSHY PARK IRONWORKS ARE TO BE NOTIFIED IMMEDIATELY.
3. THIS DRAWING IS TO BE READ IN CONJUNCTION WITH ALL RELEVANT ARCHITECTS, AND SERVICE ENGINEER'S, DRAWINGS AND SPECIFICATIONS.
4. COPYRIGHT DUNFOX LTD. TRADING AS BUSHY PARK IRONWORKS 2010.

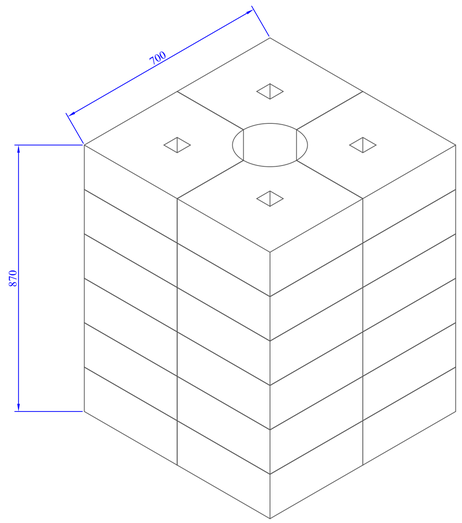

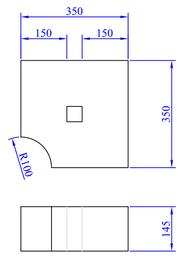

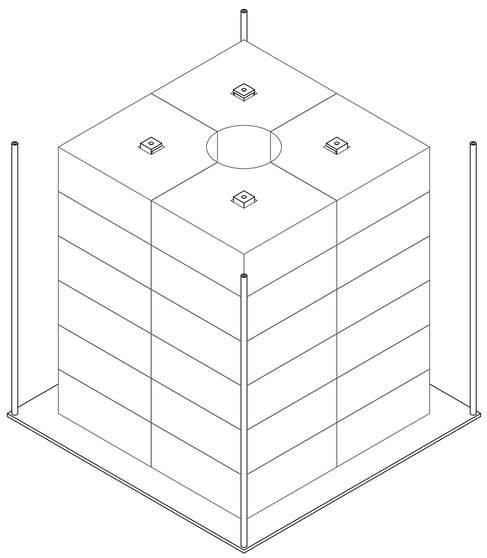

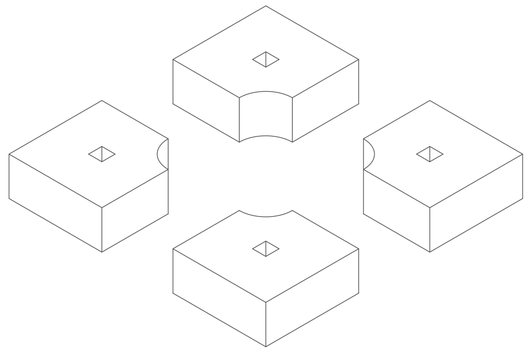

Ballast Detail.

Project: Display Case.

Scale: $\frac{1}{10}$ @A1.

Date: 11th.Nov.'10.

BUSHY PARK IRONWORKS.

Unit 22 to 24 Greenhills Business Park, Greenhills Road, Tallaght,
Dublin 24, Ireland. Tel: 00353(0)1 4622788 Fax:00353(0)1 4622790
Website: www.bushyparkironworks.com Email: info@bushyparkironworks.com

Drawn by: T R MURPHY.

Drawing No. 11111005

NOTE:
1. ALL DIMENSIONS TO BE CHECKED ON SITE AND NO MEASUREMENTS ARE TO BE SCALED OFF THIS DRAWING.
2. INCASE OF DISCREPANCY BUSHY PARK IRONWORKS ARE TO BE NOTIFIED IMMEDIATELY.
3. THIS DRAWING IS TO BE READ IN CONJUNCTION WITH ALL RELEVANT ARCHITECTS, AND SERVICE ENGINEER'S, DRAWINGS AND SPECIFICATIONS.
4. COPYRIGHT DUNFOX LTD. TRADING AS BUSHY PARK IRONWORKS 2010.

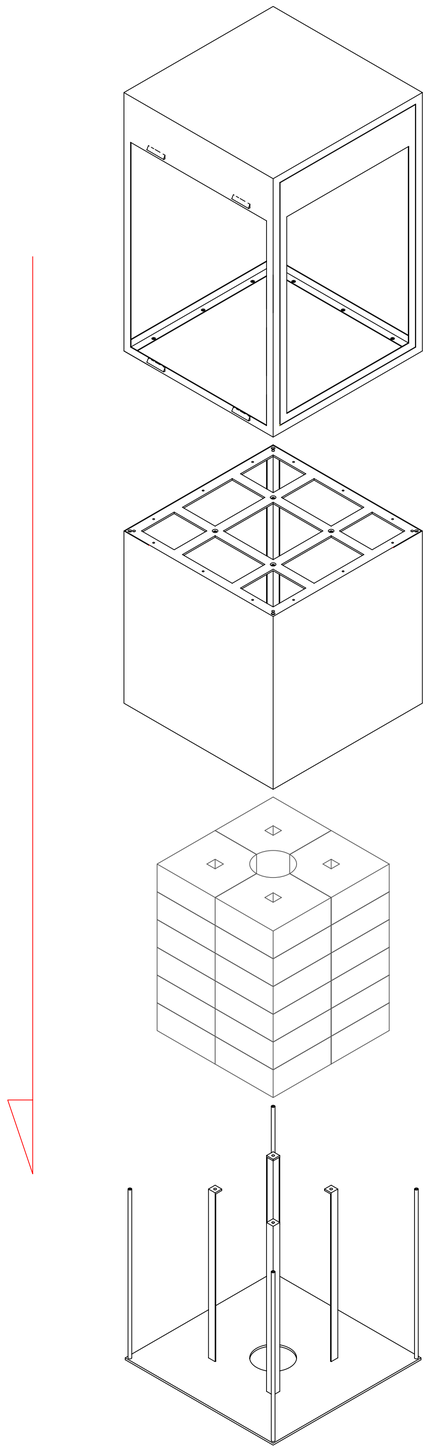

$\frac{1}{16}$@A1

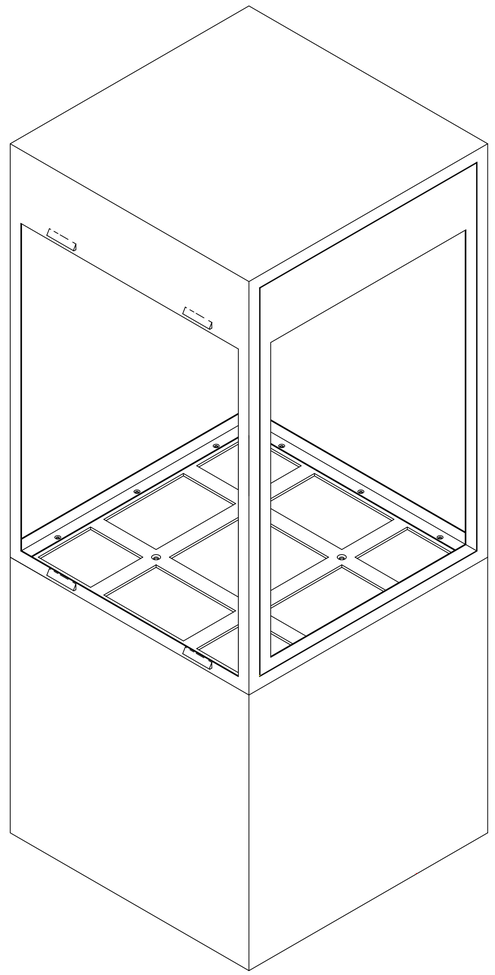

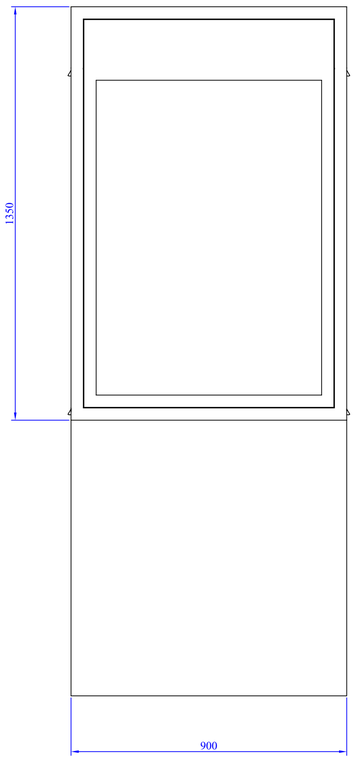

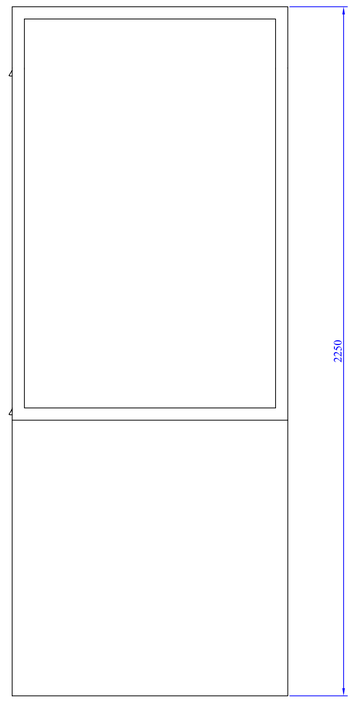

Display Case Overview.

Project: Display Case.

Scale: $\frac{1}{10}$ @A1.

Date: 11th.Nov.'10.

BUSHY PARK IRONWORKS.

Unit 22 to 24 Greenhills Business Park, Greenhills Road, Tallaght,
Dublin 24, Ireland. Tel: 00353(0)1 4622788 Fax:00353(0)1 4622790
Website: www.bushyparkironworks.com Email: info@bushyparkironworks.com

Drawn by: T R MURPHY.

Drawing No. 11111006

NOTE:
1. ALL DIMENSIONS TO BE CHECKED ON SITE AND NO MEASUREMENTS ARE TO BE SCALED OFF THIS DRAWING.
2. INCASE OF DISCREPANCY BUSHY PARK IRONWORKS ARE TO BE NOTIFIED IMMEDIATELY.
3. THIS DRAWING IS TO BE READ IN CONJUNCTION WITH ALL RELEVANT ARCHITECTS, AND SERVICE ENGINEER'S, DRAWINGS AND SPECIFICATIONS.
4. COPYRIGHT DUNFOX LTD. TRADING AS BUSHY PARK IRONWORKS 2010.

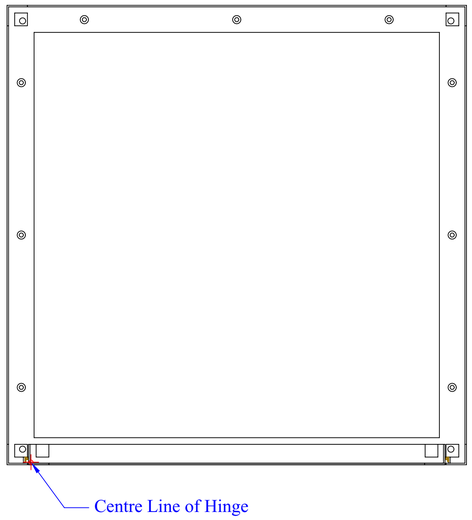

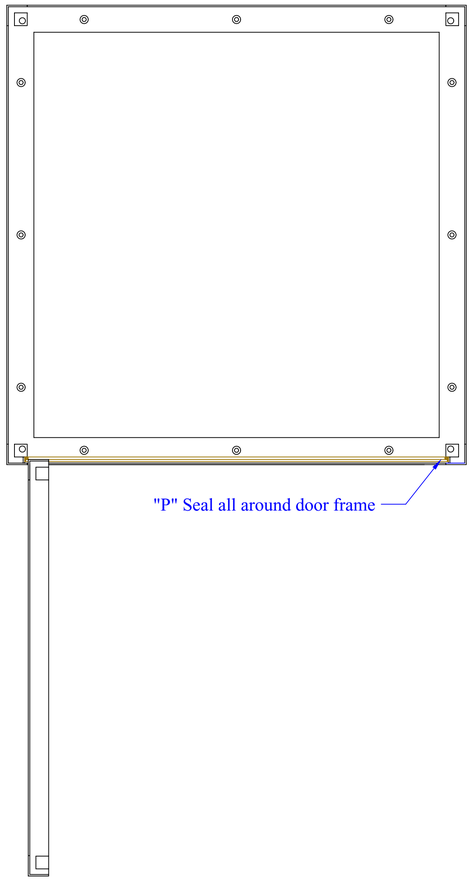

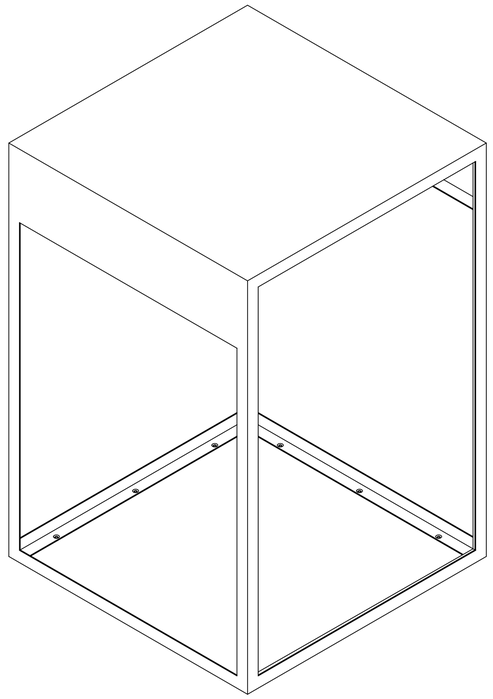

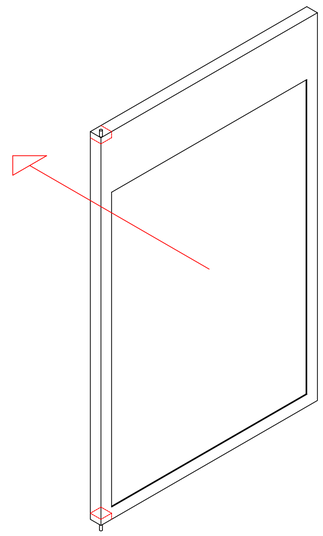

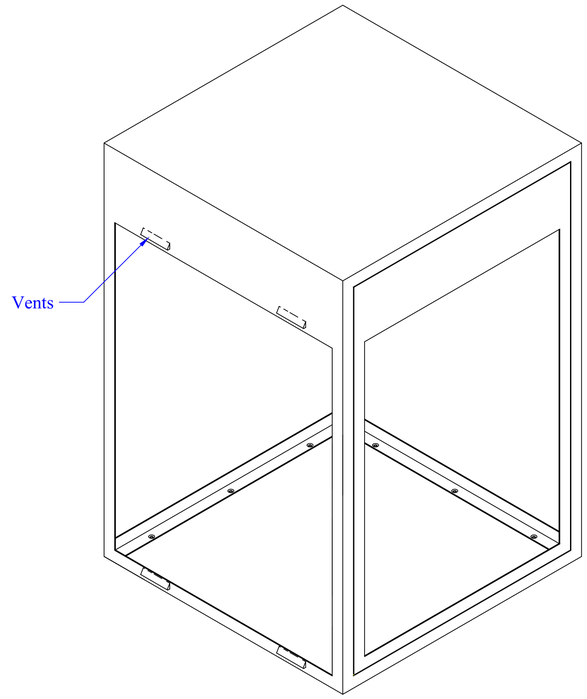

$\frac{1}{6}$@A1

Display Case Detail.

Project: Display Case.

Scale: $\frac{1}{10}$ @A1.

Date: 11th.Nov.'10.

BUSHY PARK IRONWORKS.

Drawn by: T R MURPHY.

Drawing No. 11111007

Unit 22 to 24 Greenhills Business Park, Greenhills Road, Tallaght,
Dublin 24, Ireland. Tel: 00353(0)1 4622788 Fax:00353(0)1 4622790
Website: www.bushyparkironworks.com Email: info@bushyparkironworks.com

NOTE:
1. ALL DIMENSIONS TO BE CHECKED ON SITE AND NO MEASUREMENTS ARE TO BE SCALED OFF THIS DRAWING.
2. INCASE OF DISCREPANCY BUSHY PARK IRONWORKS ARE TO BE NOTIFIED IMMEDIATELY.
3. THIS DRAWING IS TO BE READ IN CONJUNCTION WITH ALL RELEVANT ARCHITECTS, AND SERVICE ENGINEER'S, DRAWINGS AND SPECIFICATIONS.
4. COPYRIGHT DUNFOX LTD. TRADING AS BUSHY PARK IRONWORKS 2010.